Development of Photovoltaic Inverter for AC Load

Nur Fairuz Mohamed Yusof
School of Electrical System Engineering,
Universiti Malaysia Perlis,
Malaysia.
nurfairuz@unimap.edu.my

Mazwin Mazlan
School of Electrical System Engineering,
Universiti Malaysia Perlis,
Malaysia.
mazwin@unimap.edu.my

***Abstract*—This project presents the development of Photovoltaic (PV) push-pull inverter for alternating current (AC) application. There are two main systems in this project which is the PV system and the inverter system. The photovoltaic system consists of the PV panel which is used to seep sunshine to recharge the battery and the solar charger controller circuit that prevent battery from surpluses voltage is connected between solar PV and battery. While the push-pull inverter play a pivotal role in switching from direct current (DC) voltage to AC voltage for the inverter system. Then the AC voltage rose to 230 V by using transformer. The push-pull inverter switching is controlled by a multi-vibrator driver circuit. This project used two light emitting diode (LED) light bulb as an AC load and Metal Oxide Semiconductor Field Effect Transistor (MOSFETs) as the power switches. This project had been analysed through software and hardware prototype for comparison purposed. The efficiency of ideal system that obtains from software simulation is 94.9% while for the hardware prototype is nearly to 95%. While the total harmonic distortion (THD) for both voltage and current is 48.32% from software simulation and 47.9% from hardware prototype analysis. The results have been found in good agreement with the analysis presented in this paper.**

***Index Terms*—Push-pull inverter, Photovoltaic, AC load, Total harmonic distortion, PV lamp.**

I. INTRODUCTION

Nowadays, the demand of solar energy was really high. Therefore, to design and develop an efficient inverter might be a good solution. In implementing a combination of renewable energy and power electronic device, there are few options to be considered in order to produce a properly operating solar inverter system. To satisfy the requirements for the consumers, the implementation of this system must deals with certain aspects of application. The system developed can be simple or complicated depend on the availability of electronic components, the output power desired from solar PV module and inverter, and the performance of the battery itself. A good working system indeed may produce a better performance which can be classified as a perfect system. Various of inverter topologies are studied throughout these years. The method of adding a chopper to conventional inverter topology is approached [2]. Apart from that, method using 2 power switches to the topology and manipulating suitable switching signal in achieving AC outputs [4]. Latest approach is combinational of both push-pull and H-bridge topologies also being proposed [11].

This paper present an implementation of 2 power switches as a part of push-pull inverter topology with manipulating the centre tab transformer function to increase the AC voltage. By reducing the power switches usage can reduce the switching losses. Basically, a light bulb being used to represent the AC loads by showing the best concept of implementing an effective solar system for AC appliances. Therefore, this project may become a new solution to overcome the problems that related to the increasing charges for electricity consumption due to the home appliances usage. Besides, this inverter concept also can be used in industrial applications such as variable speed drives for single-phase and three-phase AC motors, standby or emergency power supplies, induction heater and AC appliances run from an automobile battery [13]. The output of PV is in DC form. Therefore, the inverter is a critical component responsible for the control of electricity flow between the PV modules, battery and loads in any PV based system as shown in Fig.1.

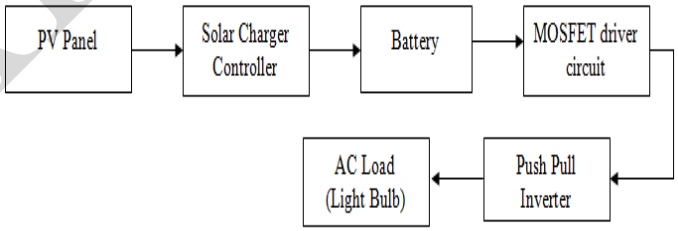

Fig. 1: Block diagram representation of photovoltaic system.

The prototype consists of four parts which operate in different level with different characteristics, but in the same phase to produce a good working system. The first part of the prototype is the input. The input consists of solar PV module which acts by delivering the power converted from the sunlight to the energy storage. A 12W solar PV module was used. Meanwhile, the energy storage part is covered by two components, which are a charge controller circuit and 12 V battery. The charge controller operates by keeping the battery properly charged by the solar PV module. As the battery is fully charged, the charge controller will cut off the current from the supply in order to prevent the battery from damaged. The third stage is the heart of the prototype which is single phase inverter. This part consists of the conversion process from DC voltage produced by the supply into AC voltage.

IJARE

This is an open access article under the CC BY-SA 4.0 license (https://creativecommons.org/licenses/by-sa/4.0/)

The inverter is connected in the flow between the battery and the load in order to transform the DC voltage from the battery into AC voltage. The 12V output from the inverter is step up 230V by using transformer as the load requires 230V input for its normal operation. This prototype utilize two 3W light emitting diode (LED) light bulb as the AC load. This project implements the type of push-pull inverter application as the DC to AC converter. The circuit is designed by referring to the basic concept of push-pull topology circuit.

The schematic diagram of the push-pull inverter is designed in PSIM software by using push-pull topology as shown in Fig.2. A 12VDC is used to replace the PV function. While for the switching 2 gating block is used that represent the positive half-cycle from 0° to 180° of the switching conduction. Meanwhile for the negative half-cycle, the switching point is set from 180° to 360° conduction angle. The frequency of the gating blocks was set at 50Hz.

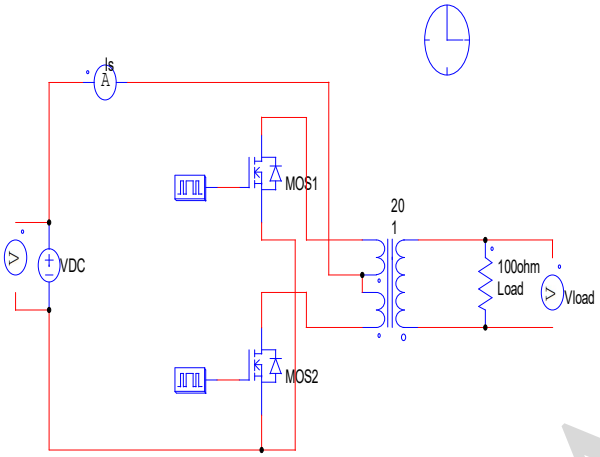

Fig. 2: Simulation Diagram For Push Pull Inverter With Center Tap Transformer

As the switches are rapidly switching from one state to another based on the switching sequence, the current flows through one of the two alternate paths at the end of primary winding. As a result, the alternating waveforms are produced at the output terminal of the inverter. Then these waveforms are fed through a centre tab transformer to amplify the output voltage to a desire value. The value of output voltage obtain is 240.8 V, output current is 2.4 A as shown in Fig.3. Hence the output power is equal to 547.73 W while the input power is 519.85 W. Therefore the efficiency of the simulation inverter is equal to 94.9% as shown in (1)

The quality of the inverter output waveform can be expressed by using the Fourier analysis data in order to calculate the THD [20]. THD is the ratio of the current or voltage of all higher harmonic frequency to the fundamental frequency. Harmonic is the periodic sinusoidal distortions of the supply voltage or load current. It is measured in integral multiples of the fundamental frequency [20]. Meanwhile, the total harmonic distortion for both voltage and current is 0.4832 or 48.32 % as shown in Fig.4

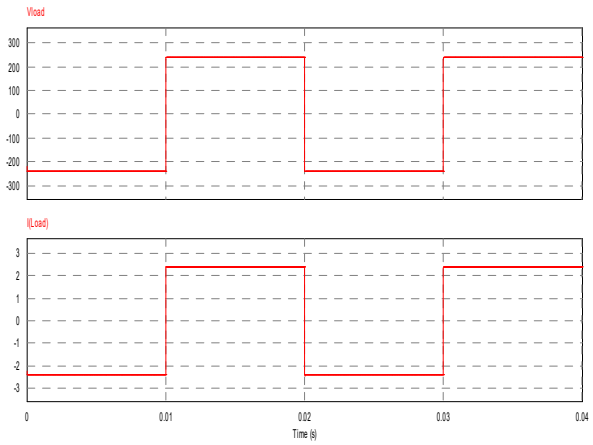

Fig. 3: Output waveform of voltage and current

$$\text{Efficiency } (\%) = \frac{\text{Pout}}{\text{Pin}} \times 100 = \frac{547.73}{519.85} \times 100 = 94.9\% \quad (1)$$

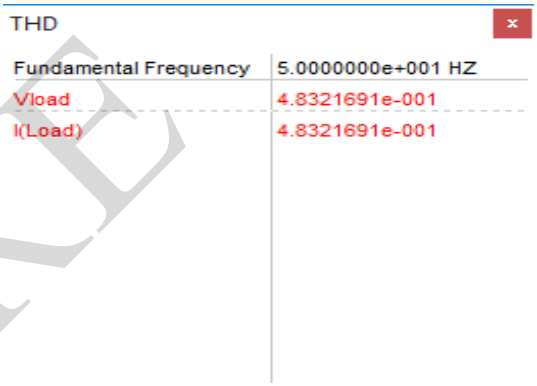

Fig. 4: Total Harmonic Distortion (THD) Of Voltage and Current.

II. HARDWARE IMPLEMENTATION

The push-pull topology is suitable for producing square and modified square wave inverter. The inverter switching circuit is built around a multi-vibrator component, CD4047 (IC2). This chip acts as the main component of the switching circuit. It produces three square wave signal outputs which are pin 10, 11, and 13. Pin 13 of the IC2 produce the fundamental frequency waveform. Meanwhile, the output from pin 11 and 10 produces half the fundamental frequency. However, at pin 10 the signal is inverted to 180° which indicates opposite characteristics to pin 11.

The frequency is determined by two components which are 0.1µF capacitor (C1) and 45 kΩ variable resistor (VR1) in order to obtain 50Hz for the system. Other components such as NPN transistors, resistors, and zener diodes act as the gate driver for the Metal Oxide Semiconductor Field Effect Transistor (MOSFETs) to operate. As the base of TIP120 is grounded (0V), it is switched OFF as no base current flows, hence no current flows from the emitter to the collector. This condition causing the MOSFET to switch OFF too, thus no voltage supplied from the battery via the center tapped transformer. If the base is in forward biased condition, TIP120

IJARE

This is an open access article under the CC BY-SA 4.0 license (https://creativecommons.org/licenses/by-sa/4.0/)

is switched ON as a current flow from the emitter to the collector. At this point, the MOSFET also switched ON. The gate switch, TIP120 conduct by turn based on the gating pulse received from the output pin multi-vibrator.

Meanwhile, the operations of the MOSFETs depend on the switching sequence of the TIP120. The designed circuit only involved two output pins of IC2 which are pins 10 and 11. Since the output signals from these two pins are inverted to each other by 180°, it changes the polarity of the center tapped transformer and producing a square wave output signal. The assembled push-pull inverter circuit must be connected to a center tapped transformer in order to operate. The selection of the correct size of the transformer is important to obtain the desired output voltage.

Since the load used in the project consumed a very low current from the battery, the maximum rated current of the transformer can be very low. Hence, a center tapped transformer rated at 2A with ratio 1: 20 was selected. It is suitable for the designed inverter circuit since the load carry a very low current from the supply. If the current flow exceeds the maximum rated current of the transformer, the circuit may not operate as the component in the circuit could be damaged. The push-pull inverter circuit with MOSFET driver circuit is shown in Fig.5.

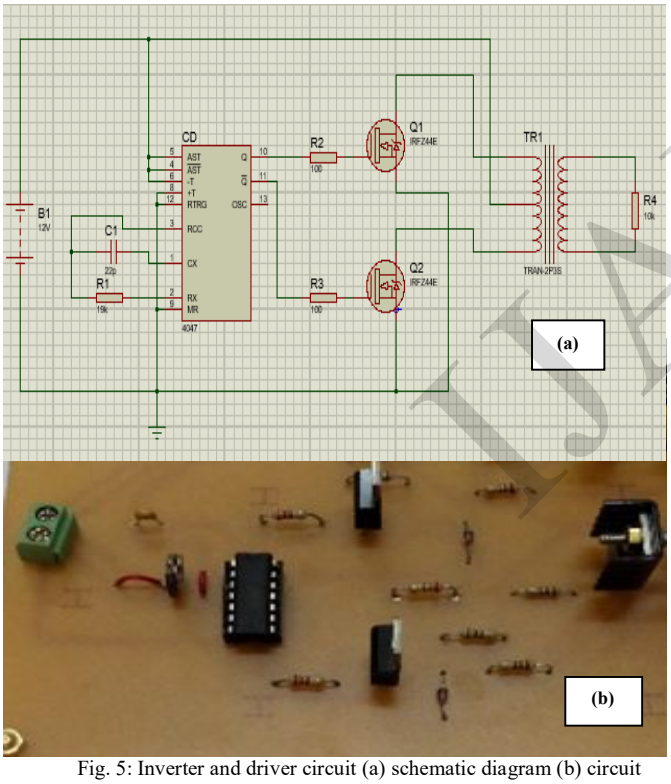

Fig. 5: Inverter and driver circuit (a) schematic diagram (b) circuit implementation

Fig.6 shows the output waveform produced from the primary side of the transformer. The square wave signal has been amplified by the MOSFET Q1 and Q2 respectively at which the output waveform in (a) 10.2 V peak to peak while (b) 12.6 V peak-to-peak at 44.98 Hz. This operation results the induced voltage at the secondary winding of the transformer.

The waveform displayed in Fig.7 represents the output of the push-pull inverter circuit designed. This waveform has been taken from the secondary side of the transformer. It shows that the output waveform is a square wave type with a 50.45 Hz frequency. The measurement of maximum output voltage was slightly higher than the expected value which is 254 V and the frequency is 50.4 Hz with 49.8mA current load. The measurement of input voltage and input current is equal to 12.2 V and 1.09 A. Therefore the efficiency of hardware prototype can be calculated as shown in (2) is 95.04% which is consider as acceptable for 6 W LED lamp load.

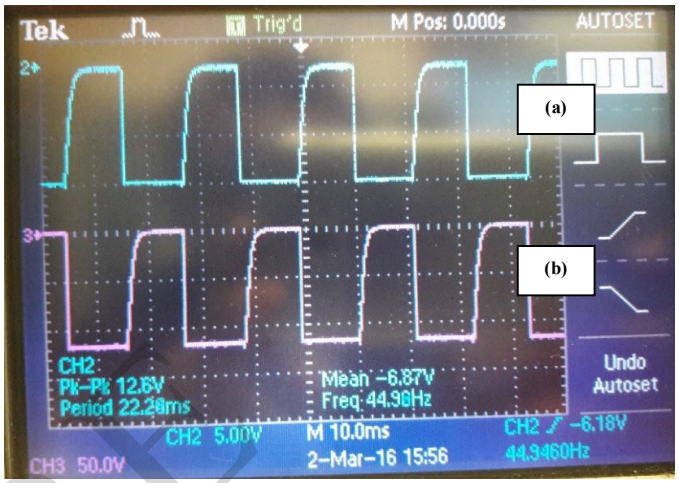

Fig. 6: (a) Output from MOSFET Q1 (b) Output from MOSFET Q2 at primary side of the transformer

$$\text{Efficiency } (\%) = \frac{\text{Pout}}{\text{Pin}} \times 100 = \frac{12.64}{13.3} \times 100 = 95.04\% \quad (2)$$

The output of the inverter is not generated as a nice and clean square wave. It has a problem on the positive slope as shown in Fig.7. There will be dissipation of power if the MOSFETs are only ½ ON. The time interval between OFF and ON may be small but it is enough to cause the output of MOSFET to dissipate power. However, this slope can be use to cause a delay. So, there is a moment of pause between the two MOSFETs ON time and this will avoid overlap.

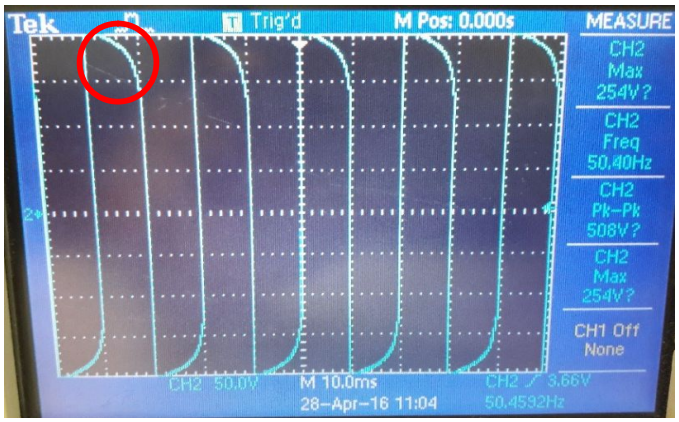

Fig. 7: Output voltage at the secondary side of the transformer

This is an open access article under the CC BY-SA 4.0 license (https://creativecommons.org/licenses/by-sa/4.0/)

Fig.8 shows the hardware prototype measurement of THD. The percentage of THDv and THDi will get the same value which is 47.9 %. The THD values obtain can be classified as high. However, it is acceptable since the output waveform generated is a square wave which normally generated slightly high THD compare to the sinusoidal.

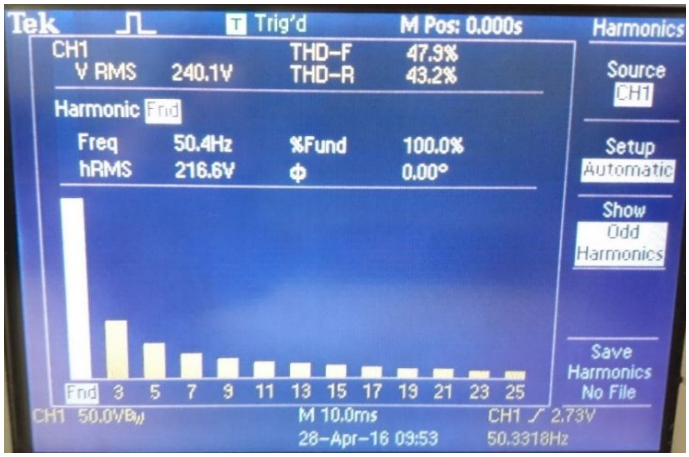

Fig. 8: THD generated from the output of the inverter circuit

Fig.9 shows that the two LED bulb (load) operated well during the prototype testing process. It can be concluded that the sleeping produced the desired output required although the application of the sleeping lamp tested during night period. In the testing also shows that the inverter can support might two LED bulbs which connected in parallel when the switch is ON.


Fig. 9: Prototype testing with two LED bulb

III. CONCLUSION

In this paper, a prototype of push-pull topology inverter was develops. The simulation was performed using PSIM software while the inverter hardware prototype consists of the PV module, charger controller circuit, battery, inverter circuit and step-up transformer also being tested. From the result obtained, the output waveform of this inverter circuit is square waveform. This inverter successfully converts the 12 VDC into nearly 230 VAC with 95% of inverter efficiency. The operation and performance of the inverter has also been confirmed by the prototype results of proposed converter. The results have been found in good agreement with the analysis presented in this paper. Therefore, this paper recommends the proposed topology to support other AC appliances rather than the LED bulb.

ACKNOWLEDGMENT

This research was supports by University Malaysia Perlis (UniMAP) Short Term Grant.

REFERENCES

[1] T. I Maris, St. Kourtesi, L. Ekonomou and G.P. Fotis, (November 2007), "Modeling of a Single-phase Photovoltaic Inverter", Elsevier Journal on Solar Energy Materials and Solar Cells, 91(18), pp. 1713-1725, Available :http://www.sciencedirect.com/science/article/pii/S0927024807002292

[2] K. Al-Mamun, N. Sundaraj, N. Ahmed, U. Ahamed, S.A.M. M. Rahman, R.B. Ahmad, and M. H. Kabir, "Design and Development of a Low Cost Solar Energy System for the Rural Area", presented at IEEE Conference on Systems, Process & Control (ICSPC), 13-15 December, 2013.

[3] J.P. Agrawal, Power electronic system: Theory and Design. America. Prentice Hall, 2011.

[4] S.S. Shema, I. Daut, A.N. Syafawati, M. Irwanto and C. Shatri 2011. "Simulation of Push-Pull Inverter for Photovoltaic Application", presented at the 5th International Power Engineering and Optimization Conference (PEOCO), 6-7 June, 2011.

[5] S. G. Tesfahunegn, O. Ulleberg, T. M. Undeland, and P. J. S. Vie, "A Simplified Battery Charge Controller for Safety and Increased Utilization in Standalone PV Applications", presented at International Conference on Clean Electrical Power (ICCEP), 14-16 June, 2011.

[6] O. Erdinc, N.G. Paterakis, J.P.S. Catalã, I.N. Pappi and A.G. Bakirtzi, "Smart Households and Home Energy Management Systems with Innovative Sizing of Distributed Generation and Storage for Customers", presented at 48th Hawaii International Conference on System Sciences (HICSS). 5-8 January, 2015.

[7] S. Rohit and S.C. Bhattacharyya, (August 2013), "Off-grid electricity generation with renewable energy technologies in India: An application of HOMER", Elsevier Journal on Renewable Energy, 62, pp. 388-392, Available : http://www.sciencedirect.com/science/article/pii/S0960148113003832

[8] M.M. Rahman, M.M Hasan, J.V. Paatero and R. R. Lahdelma, (February 2014), "Hybrid Application of Biogas And Solar Resources to Fulfill Household Energy Needs: A Potentially Viable Option In Rural Areas of Developing Countries". Elsevier Journal on Renewable Energy, 68, pp. 35-45,Available: http://www.sciencedirect.com/science/article/pii/S0960148114000597.

[9] O. Deveci, M. Onkol, H.O. Unver and Z. Ozturk, (May 2015), "Design and Development of a Low-Cost Solar Powered Drip Irrigation System Using Systems Modelling Language". Elsevier Journal of Cleaner Production, 102, pp. 529-544. Available: http://www.sciencedirect.com/science/article/pii/S0959652615004990

[10] Y. Iwafune, T. Ikegami, J.G.D.S. Fonseca, T. Oozeki, and K. Ogimoto, (March 2015), "Cooperative home energy management using batteries for a photovoltaic system considering the diversity of households". Energy Conversion and Management, 96, pp. 322-329.

This is an open access article under the CC BY-SA 4.0 license (https://creativecommons.org/licenses/by-sa/4.0/)