# Study on Developing a System with IP Functionality to Monitor the Status of Containers in Maritime Logistics

Tae Hoon Kim
Dong-A University Research Park
Busan, Korea
rider7979@dau.ac.kr

Shin Jun Park
Dong-A University Research Park
Busan, Korea
shinjun@dau.ac.kr

Jong Wook Kim
Dong-A University Research Park
Busan, Korea
kjwook@dau.ac.kr

Byung-O Kang
Dong-A University Research Park
Busan, Korea
bokang@dau.ac.kr

Mi Jin Jeon
Dong-A University Research Park
Busan, Korea
jin00741@dau.ac.kr

Hyung-Rim Choi
Dong-A University Research Park
Busan, Korea
hrchoi@dau.ac.kr

Eun Kyu Lee
Dong-A University Research Park
Busan, Korea
jabanora@dau.ac.kr

***Abstract*— There has been increasing demand from consignors and shipping companies for real-time monitoring of maritime cargo due to increases in fresh, dangerous, and high-value cargo. Although larger carriers have developed and integrated their own systems for such real-time monitoring services, small- and medium-sized shippers are struggling with the heavy costs and workforce associated with such capability. This study introduces a system that can do real-time monitoring of the location of shipping containers and their internal status by using IP-RFID that in cludes IP functionality. This system is composed of a tag, a smart point, and a service platform. The monitoring tags are attached to regular containers to track the opening and closing of the doors, the internal temperature, and humidity. The tags then send the data to the smart point where the GPS information is added. The data packet is then finally transmitted to the service platform for location tracking. In particular, as the tags in this system have IP functionality like Multicast, they are capable of communicating with the users and also allow users to control them. In order to provide such functionality, the smart points can serve as a gateway between the service platform and the tag. By managing the tag's connection information and the status of transmission at the smart point, the service platform can directly communicate with tags connected to the respective smart point. This technology could be applied in a diverse range of maritime and non-maritime areas including warehouse management. As for maritime logistics, it also often goes through ground, port, and air transportation phases. Further studies should monitor the actual performance of this equipment across the various phases of maritime logistics to empirically test the systems proposed herein.**

***Index Terms*—RFID, IP, Maritime Logistics, Monitoring, Container**

## I. INTRODUCTION

In the past, pricing and speed were the main competition areas in maritime logistics. However, the recent increase in more diverse cargo, such as fresh goods, high-price items, and unstable materials, has changed the paradigm to "the safe and smooth flow of cargo." To respond to such change in the paradigm for maritime logistics, many logistics companies are integrating technologies to monitor the status and location of their container shipments. Globally renowned carriers, like Maersk and OOCL, install telecommunications infrastructure on their ships to monitor the status of their containers. Through this, they provide real-time monitoring services for their refrigerated shipments.

However, such technologies employ high-cost devices that include telecommunications modules and are only used to monitor refrigerated containers. It is therefore difficult to apply the same technology to large numbers of ordinary containers. And although many carriers recognize the need for the ability to monitor their containers to enhance the safety and quality of service, small and medium carriers cannot always afford to install such high-cost telecommunication infrastructure on their ships. As consignors are also subject to high fees when they wish to use such monitoring services, it is realistically difficult to apply the monitoring system in a wide range of ships.[1] Thus, this study introduces the RFID system that incorporates the bilateral communication function of IP on existing RFID (Radio Frequency Identification) technology, and applies this system to trial runs for testing.

## II. RELATED RESEARCH

Large shipping companies, like Maersk, OOCL, and Triton, are leading studies on monitoring devices for containers in the maritime logistics industry. Small and medium companies, like

IJARE

This is an open access article under the CC BY-SA 4.0 license (https://creativecommons.org/licenses/by-sa/4.0/)

S-Winnus and KIC Systems, are working on commercializing such devices. The most commonly used monitoring equipment is that from Maersk's for refrigerated containers, which uses the XT-6200 of the American company, XIRGO. This equipment is connected to the refrigerated container's PCT (Power Cable Transmission) slave modem interface to collect and transmit the status data. OOCL, another major global shipping company, also uses an equipment to monitor the route and status of the containers.

If the shipment goes off route or if contingencies occur, the monitoring equipment immediately notifies the manager through e-mail and mobile messages. The container monitoring equipment that Triton is developing can be used on regular containers. The Triton equipment will collect the location information, temperature, humidity, and the status of door opening or closing, and transmit the data to the manager via telecommunication. In Korea, Hyundai Merchant Marine has provided status monitoring service for its refrigerated container shipments through the 433 MHz bandwidth communication developed by KIC Systems. S-Winnus has also developed a product called ConTracer, which detects and provides information on the container's door status, temperature, humidity, impact, and GPS(Global Positioning System)-based location.

However, such status monitoring devices include high-end telecommunication modules that can incur significant costs when installed on regular containers. In addition, their transmissions use telecommunication technology, which would require the installation of very expensive base stations. This study has developed an IP-RFID system that includes the bidirectional communication feature of IP functions.

## III. MAIN STUDY

Existing RFID systems have a simple structure where a reader collects and transmits simple data inserted in the tag to the server. The IP-RFID [2], however, allows bilateral communication between the tag and the smart point, which enables the user to communicate directly with the tag. As such, the user can transmit the necessary data and control the tag with IP-RFID. The IP-RFID system is comprised of the IP-RFID tag, smart point, and service platform[3][4]. Figure 1 depicts the composition of the IP-RFID System.

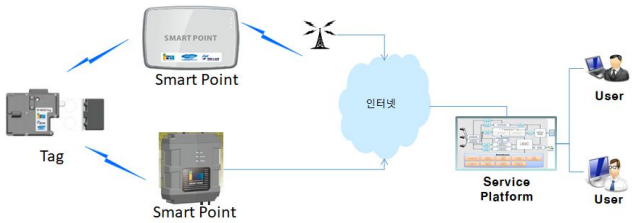


Fig 1. IP-RFID System Composition.

### A. Tags

Tags are powered by batteries. Because they go on multiple regular containers, it is essential to make the tags lightweight. Thus, it becomes necessary to minimize the tags' hardware composition.

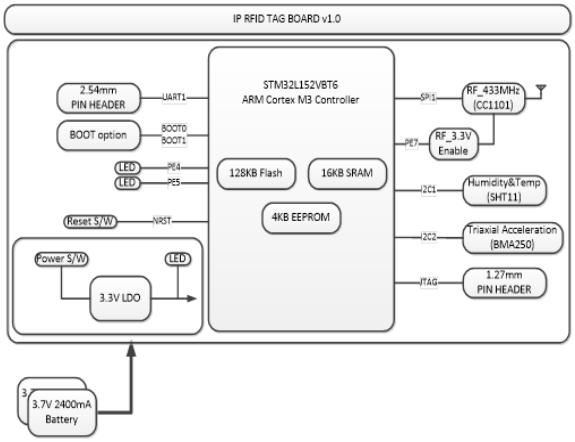


Fig 2. Tag's Hardware Composition.

The tag's hardware composition includes the Cortex-M3-based STM32L MCU with the 32bit Core that works on low power. As shown in Figure 2, the uC-OS/II was selected as the operating system to enhance the real-time responsiveness. There are also the sensors for detecting temperature, humidity, impact, and door status, as well as the communication module for 433 MHz communication.

### B. Smart Point

The smart point communicates with the tag to transmit the information collected by the sensors to the service platform. In particular, the smart point differs from an ordinary RFID reader because it performs the connection process with the tag to provide the IP feature, and maintains its connection with the tag through this. When the service platform delivers the packet to the tag, the packet is relayed to the connected tag. To support this, the packet's routing and gateway functionality are included. Figure 3 illustrates how the smart point is composed.

As the methods and efficiencies of communication can vary depending on the logistical flow, smart point includes a variety of communication modules. Smart point supports 433 MHz wireless communication for the maritime tags, while also providing WCDMA/GSM support for ground-based transportation and littoral Internet connection. Smart point also provides tracking and monitoring functions through its GPS module. Smart point also comes with the software module for Linux-based tunneling in support of IPv6. Smart points are categorized as smart point gateway and smart point relay, depending on their purpose. The smart point gateway is installed in vehicles or ports to serve as a relay for the tags and the service platform. On the other hand, the smart point relay is used to transmit data from dead zones that have little to no telecommunications coverage.

IJARE

This is an open access article under the CC BY-SA 4.0 license (https://creativecommons.org/licenses/by-sa/4.0/)

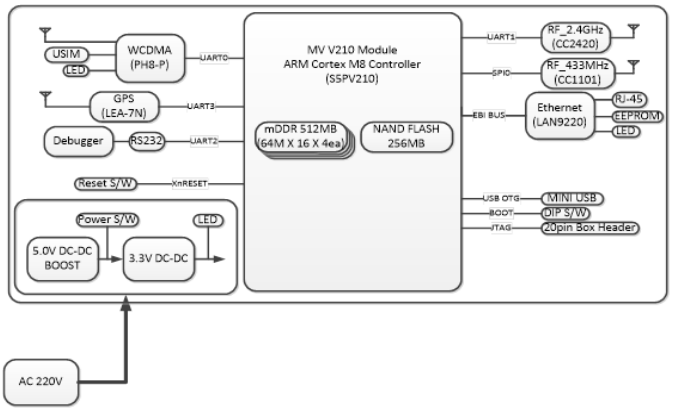


Fig 3. Smart Point's Hardware Composition.

### C. Service Platform

The service platform acts as the middleware and database server. It is the base platform that provides convenient and application features for the users as they interact with the IP-RFID tag. The service platform provides real-time information and takes measures based on the user's queries. In addition, it provides tracking service based on the tag's location data, as well as monitoring service for the container cargo.

### D. IP-RFID System's Features and Operational Process

The bilateral communication process between the tag and smart point takes place in two steps, as depicted in Figure 4 the initialization process, which prepares the connection between the tag and the smart point; and the data transmission process that sends the information the tag collected to the service platform. In the initialization phase, the tag and the smart point are connected via the "join" process. At this time, the smart point refreshes the information on the list of the joining tag and maintains the connection information of the tag. In particular, the smart point discards received packets that do not match the packet of the registered tag, which is advantageous in that the service platform does not have to manage packet redundancy.

Once the join process is complete between the tag and the smart point, the smart point sends the registered tag information and the IP information of the smart point to the service platform. The service platform manages the information it receives, and the IP-RFID enables bilateral communication between the user and the tag. Once initialization is complete, the tag begins its activation process.

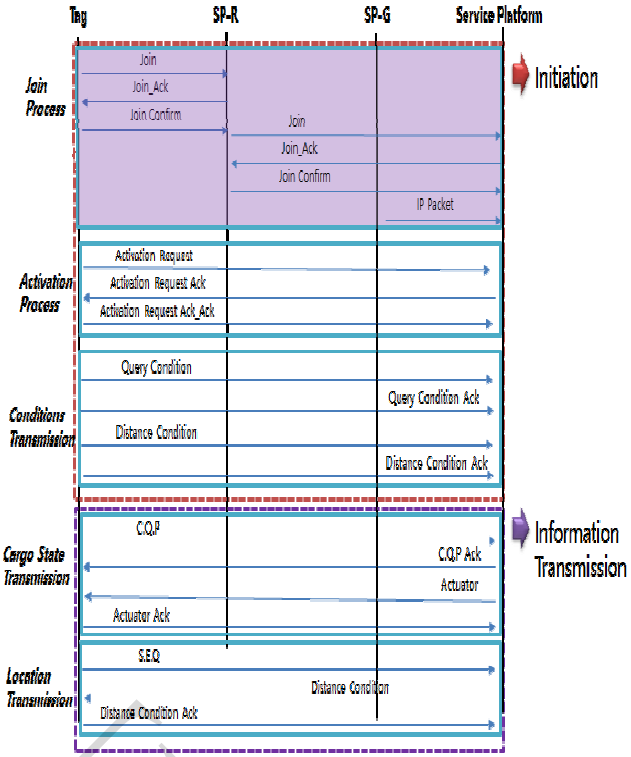


Fig 4. IP-RFID's Operational Process

During the activation process, the service platform checks for the validity of the tag. Once activation is complete, the tag begins the process to start monitoring. In the conditions transmission process, the tag has the threshold data for the cargo it needs to manage. The tag compares the data it receives from the sensor with the threshold data and sends an alert if the sensor data reach the threshold. The data that can be sent via conditions transmission include the threshold data of the sensor such as its activation cycle, alert cycle, location, temperature, humidity, and impact. Even during operation, the user can change and apply these conditions anytime. Once conditions transmission is complete, the tag sends the sensor and location data to the service platform in accordance with the conditional data it receives. If the container is fitted with lighting and emergency devices, it is possible to transmit an actuator packet to control the devices.

As the overall packet flow takes place through the wireless communication between tags and smart points, there will be dead zones receiving no coverage, in which case the smart point relays (SP-R) can be used. By installing SP-R in dead zones, the tags in such zones can join with the SP-R instead. SP-R, in turn, joins with the smart point gateway to serve as a relay between the tag and the smart point gateway. If the SP-R does not perform the join action and only sends the packet, it could lead to the redundant transmissions of all received packets, which cause frequent packet conflict, and degrade the communication performance. However, as SP-R only receives and retransmits the data sent by tags in dead zones, there will be no impact on the communication performance between the tags and the smart point gateway.

IJARE

This is an open access article under the CC BY-SA 4.0 license (https://creativecommons.org/licenses/by-sa/4.0/)

The data collection flag allows users to verify the information of the tag that needs to be sent. When the sequential collection of information based on the tag list cannot continue because of the tags from which information cannot be collected, these tags can be managed separately for connectivity. This will, in turn, reduce waiting times significantly for tags on standby.

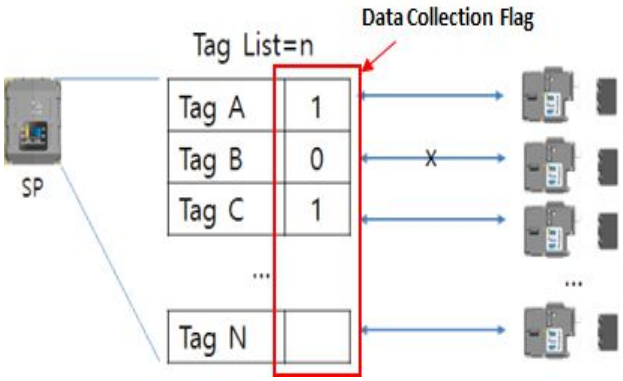


Fig 5. Smart Point's Tag List Management

## IV. CONCLUSION

In recognition of the needs of maritime logistics today, this study proposed a system composition to apply IP features on a tag, and the system's functionalities and operational processes to make this possible. Further research could compare the performance of this IP-RFID system with those of the current equipment in service at leading carriers, and conduct verification tests to enhance the equipment for actual use in maritime logistics.

## ACKNOWLEDGMENT

This research was supported by Dong-A University Research Park (DAURP) of Busan Metropolitan City.

## REFERENCES

[1] S. I. Byun, et al., "An economic analysis for active IP-RFID in port and logistics," in Proc. KICS Winter Conf., pp. 604-605, JeongSeon,Korea, Jan. 2016.

[2] T. H. Kim, et al., "Active IP-RFID system for maritime logistics," J. KIICE, vol. 40, no. 12, pp. 2511-2519, Dec. 2015.

[3] H. R. Choi, et al., "API Design for Maritime Logistics IP-RFID Service Platform," in Proc. KICS Int. Conf. Commun., pp. 1053-1054, Jeju, Korea, Jun. 2013.

[4] M. J. Jo, et al., "Development of IP-RFID platform based on service-oriented multiagent," in Proc. KICS Winter Conf., pp. 556-559, YongPyong, Korea, Feb. 2012.

IJARE

This is an open access article under the CC BY-SA 4.0 license (https://creativecommons.org/licenses/by-sa/4.0/)