Experimental Investigation and Controller Development for Variable Speed Wind-Driven DFIG

K. Vijayakumar
Department of Electrical Engineering
Malaviya National Institute of Technology
Jaipur, India
vijayk.ee@mnit.ac.in

N. Kumaresan
Department of Electrical and Electronics Engineering
National Institute of Technology
Tiruchirappalli, India
nkumar@nitt.edu

***Abstract*—This paper investigates the performance of wind-driven Doubly fed Induction Generator (DFIG) under sub-synchronous and super-synchronous speed. A simple controller for DFIG has been proposed using low cost 555 timer ICs, flip-flops and an IGBT inverter. The controller can be adjusts the frequency of inverter pulse to obtain a desired frequency despite the variations in the rotor speed of the DFIG. A prototype of the system has been built by fabricating the controller and a three-phase IGBT bridge inverter. The controller has been tested on a 4-pole, three-phase, 400V, 5kW, delta connected prototype machine driven by a DC motor under wide speed operation. The simplified steady state analysis of the system is presented. The results of the both calculated and experimental are furnished in the paper.**

***Index Terms*— DFIG, IGBT bridge inverter, wind energy electric conversion system, power converters**

I. INTRODUCTION

It is well known that the design and development of renewable energy sources is strongly encouraged now-a-days due to fast depletion of conventional energy sources and the environmental pollution caused by them [1]. Among various renewable energy sources, wind energy electric conversion system (WEECS) can produce significant quantum of electrical power output, in locations identified with fairly high/moderate wind velocity over most part of the year. There has been a sustained effort over the past couple of decades to increase the power ratings of wind turbines at the same time improving their reliability and raising their availability [2]. Further such wind energy electric conversion systems require a suitable electrical generator to be interfaced with the wind turbine.

Among various types of generators, Induction generators are the most widely used machines in wind energy electric conversion systems because of their rugged construction, reduced cost and size, maintenance free operation and self protection against short circuit [3-7]. Induction generator based wind electric conversion system can be divided as fixed speed generators and variable speed generators. In such a fixed speed wind turbines, the generator is directly connected to the electrical grid. In variable speed wind turbines, the power electronic converters are employed for decoupling turbine and generator characteristics. The reasons for using the variable speed generators in wind electric conversion system are possibilities to reduce the mechanical stresses of turbine, making it easier to operate at varying wind speeds and to control active and reactive power independently[8]. Most of the wind turbine manufacturers are developing a larger wind turbine with variable speed generators in the range of 3MW - 5MW. Normally, Permanent Magnet Synchronous Generator (PMSG) and Doubly Fed Induction Generator (DFIG) are commonly used for wind energy application [9-10]. The power electronic converter rating of the PMSG based wind turbine is equal to the generator rating because the converted mechanical energy have channeled through the back to back converters of the system. Now a days, Doubly Fed Induction Generators are popularly available for variable speed wind power generation, due to their advantages such as supplying power at constant voltage and constant frequency, the reduced size of power electronic converter (20-30% rating of the generator) in rotor side[10].

Earlier, the diode bridge converter along with phase angle controlled inverters have employed in rotor side of DFIG for super synchronous speed of operation. In the above case, the system will operate only in super-synchronous speed for power generation. Further, the researchers have used phase controlled converter and inverter system for extending the operation of speed. In this topology, the steady state performance of the system has been carried out in terms of phase angle and rotor frequency of the inverter. Recently, rotor resistance control of wound rotor induction generator along with battery storage device had been described and evaluated their performance characteristic with speed sensor-less algorithm[11]. The system had a limited speed range of operation. However, with the availability of high efficiency power electronic converter technology, IGBTs based back to back converters have been proposed for DFIG by several authors[10,12-13]. The rotor currents in a desired phase, frequency and magnitude can be controlled by the three phase PWM inverter in the rotor circuit. Several papers have addressed the analysis, modeling and controlling of DFIG using back to back converters. Some experimental work has been reported for stand-alone DFIG systems [13], [14]. Most of the authors have explained the field oriented control strategy for the regulation of stator voltage and frequency. The stator voltage is regulated indirectly by controlling the magnetizing current of the machine, while the stator frequency is kept constant by impressing proper slip

IJARE

frequency currents from rotor terminals. All the schemes have used either speed or position sensor for the control. Recently, work has been reported which attempted sensorless control of a standalone doubly fed generator based on the model reference adaptive system observer scheme. Field oriented vector control is employed for controlling the stator voltage and frequency of generator [15]. Recently, the present authors have described the operation and control of the DFIG by using SPWM inverter at the rotor side with digital controller based scalar control strategy for stand-alone and grid connected system [16]-[18]. In the present paper, authors have extended the operation of

DFIG with single inverter system along with analog controller. Here, the diode bridge rectifier can be used for providing the dc supply at input terminals of inverter. Present paper describes the simple controller circuit by using low cost 555 timer ICs. The rotor is excited with the three-phase stepped wave form from a three-phase bridge inverter. The developed controller will work in open loop operation. Moreover, the simplified steady state analysis is validated with conventional equations. A MATLAB program has been formulated for the predetermination of performance of the DFIG. The theoretical values are verified with the experimental values and their results are furnished in the paper. The prototype laboratory machine is used to study the performance of the DFIG and experimental verification under sub-synchronous operation.

II. System Description

The block diagram schematic of the proposed wind energy conversion scheme is shown in Fig.1. The system consists of wind turbine driving a DFIG interfaced to the three-phase grid directly. while the rotor is excited with three-phase bridge inverter via slip rings to allow DFIG to operate as a generator at sub-synchronous speed in response to changing wind speed. In the sub-synchronous mode of operation, electric power can be fed from the three-phase bridge inverter through rotor winding. During super synchronous mode of operation, the power is extracted from the rotor. In this mode of operation, the load resistance should be connected at dc terminal of the inverter terminals to balance the power. When the rotor winding is excited with the inverter-battery system, a DFIG can generate the power at stator terminals. The rotor current and frequency of the DFIG can be adjusted by bridge inverter. If the generator is rotating at the speed of N_r with the grid frequency f_s, hence the rotor should be excited with the slip frequency of sf_s. In the proposed system, the frequency of the inverter is depending upon the frequency of square wave generator in control circuit. The reference has been adjusted in open loop for corresponding rotor speed of the generator. The required rotor voltage can be achieved by varying the dc voltage at input terminal of the inverter. In experimental setup, the three phase auto transformer is connected with diode bridge rectifier.

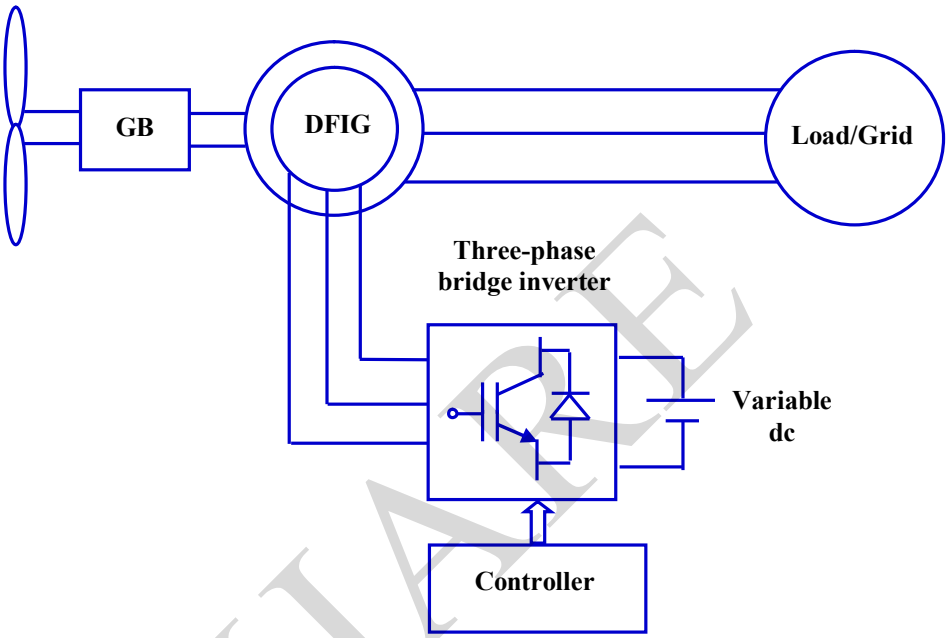

Fig .1.Block Diagram of Proposed Wind Energy Conversion System

A. Power Circuit Of Three-Phase Bridge Inverter

The bridge configuration of a voltage source, three-phase IGBT inverter is shown in Fig.2. It has been fabricated using three numbers of SKM100GB125D IGBT modules and each IGBT module is fired using SKYPER32PRO gate drive circuit (G.D.). The pulses are generated by using the simple controller circuit. The dc input to the inverter, V_{dc} is the battery voltage which is almost constant at terminals. The required frequency (i.e., slip frequency) of the rotor side voltage is given as reference voltage V_{Ref} to the controller. Based on the reference voltage, the controller adjusts the frequency of the control pulse. Hence, a slip frequency of excited voltage is fed into the rotor side of DFIG. The line voltages of the inverter are 120 electrical degrees in duration, the phase voltages are six stepped quasi-sine waveforms. The Fourier series

IJARE

representation of the periodic voltage waveforms are given below.

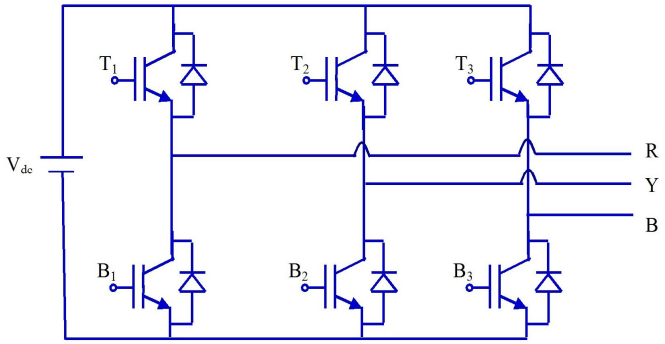

Fig.2 Power Circuit Of 3-Phase Inverter

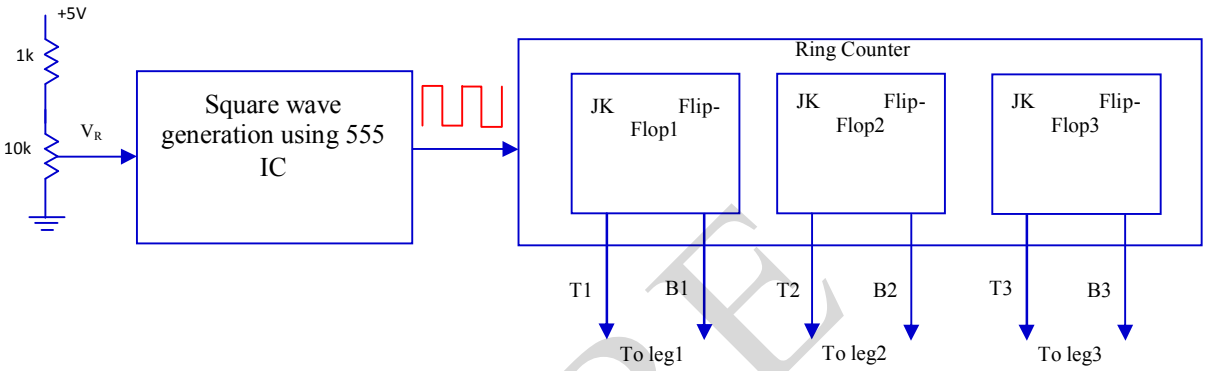

Fig.3 Schematic Of Overall Control Circuit

$$v_{ab}(t) = (2\sqrt{3}V_{dc}/\pi)\{\sin\omega t - (1/5)\sin 5\omega t - (1/7)\sin 7\omega t - \ldots\} \quad (1)$$

$$v_{bc}(t) = (2\sqrt{3}V_{dc}/\pi)\{\sin[\omega t - 120°] - 1/5\sin[5\omega t - 120°] - 1/7\sin[7\omega t - 120°] - \ldots\} \quad (2)$$

$$v_{ca}(t) = (2\sqrt{3}V_{dc}/\pi)\{\sin[\omega t + 120°] - 1/5\sin[5\omega t + 120°] - 1/7\sin[7\omega t + 120°] - \ldots\} \quad (3)$$

where v_{ab}, v_{bc}, v_{ca} are instantaneous values of the inverter output voltage.

The fundamental rms phase voltage for the six-stepped waveform is given below

$$V_{as} = (2/\pi)V_{dc} \quad (4)$$

B. Control Circuit of Three-Phase Bridge Inverter

The overall schematic of control circuit is shown in Fig.3. In a controller circuit, the reference voltage, V_R, which represents the desired frequency of ac voltage at the output of the inverter is derived from a +5V supply through a 10 kΩ preset in series with 1kΩ resistor. The reference voltage, V_R, is given as input to a square wave generator, the output of which is given to the second stage. The second stage consists of a combination of flip-flops connected as a ring counter. The ring counter stage gives the three sets of pulses to the bridge inverter, in which pulses T1 and B1 are shifted by 180 degrees.

III. STEADY STATE ANALYSIS OF THE SYSTEM

The equivalent circuit of the DFIG is shown in Fig.4. The stator of the DFIG is connected to the three-phase grid and the rotor side is excited with three phase bridge inverter. The DFIG can be regarded as a traditional induction generator with a voltage source at rotor side. Using the equivalent circuit, the performance of the Doubly-Fed Induction Generator has been analyzed and the equations of the various performance quantities are presented. In this approach, the core loss components are incorporated with equivalent circuit.

On referring to the equivalent circuit shown in Fig.4, the following equations are expressed by applying Kirchhoff's voltage law.

$$(Z_1 + j\frac{R_m X_m}{Z_m})I_1 - (j\frac{R_m X_m}{Z_m})I_2 = -V_1 \quad (5)$$

$$(-jR_m X_m / Z_m)I_1 + (Z_2 + j\frac{R_m X_m}{Z_m})I_2 = \frac{-V_2}{s} \quad (6)$$

The above equations (5) and (6) can be rewritten as,

$$\begin{bmatrix} (Z_1 + j\frac{R_m X_m}{Z_m}) & -(j\frac{R_m X_m}{Z_m}) \\ -(j\frac{R_m X_m}{Z_m}) & (Z_2 + j\frac{R_m X_m}{Z_m}) \end{bmatrix} \begin{bmatrix} I_1 \\ I_2 \end{bmatrix} = \begin{bmatrix} -V_1 \\ \frac{-V_2}{s} \end{bmatrix} \quad (7)$$

Where $Z_1 = R_1 + jX_1$, $Z_2 = \frac{R_2}{s} + jX_2$, $Z_m = R_m + jX_m$.

The slip is given by

$$s = \frac{N_s - N_r}{N_s}$$

where N_s=synchronous speed, N_r=rotor speed

The stator real and reactive power can thus be derived as follows

$P_1 = 3\mathrm{Re}(V_1 I_1^*)$ and $Q_1 = 3\mathrm{Im}(V_1 I_1^*)$ (8)

Similarly, the rotor real and reactive can be derived as

IJARE

$P_2=3Re(V_2I_2^*)$ and $Q_2=3Im(V_2I_2^*)$ (9)

The mechanical power is

$$P_m = 3I_2^2R_2\left(\frac{1-s}{s}\right)+\left(\frac{1-s}{s}\right)P_2 \quad (10)$$

It is to be noted that the mechanical power is related as follows,

$P_m=P_1+P_2+P_{1,L}+P_{2,L}+P_{m,L}$

where $P_{1,L}$= stator winding loss, $P_{2,L}$= rotor winding loss, $P_{m,L}$=mechanical loss

In the case of stand-alone system, the load has been connected at stator terminal of the machine.

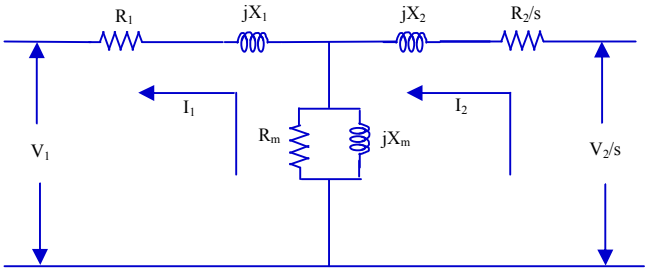

Fig.4. Steady State Equivalent Circuit of DFIG

IV. RESULTS AND DISCUSSIONS

To validate the steady state analysis of the system for stand-alone loads, experiments have been conducted in laboratory with prototype system consists of 4-pole, three-phase, 400V, 5kW, delta connected slip ring induction machine and SEMIKRON made IGBT inverter. The controller has been fabricated by using 555 timer IC and JK flip flops as shown in Fig. 3. A detailed set of calculated results by using the equations described in the previous section have been presented in this paper. Further, the prototype experimental system has been operated in steady state to validate the theoretical results of the stand alone DFIG system.

In order to evaluate the robustness of the controller, the system has been tested under varying condition. For sake of brevity, the experimental results captured by digital storage oscilloscope have been included in this section.

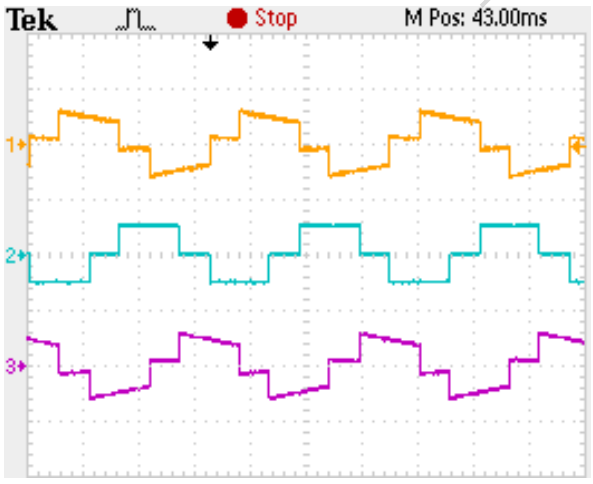

(a) Gate pulses to inverter

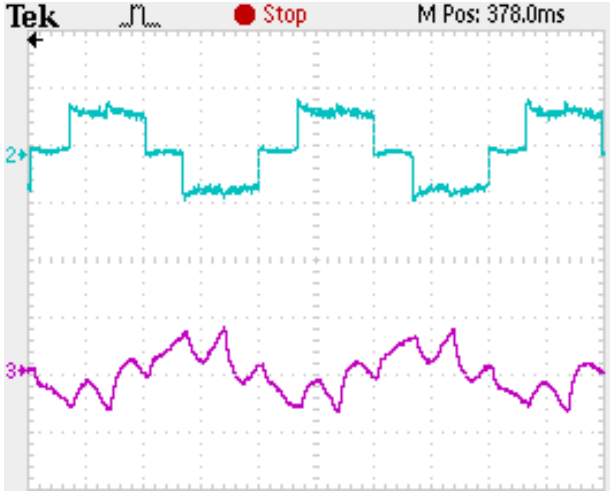

(b) Rotor voltage and rotor current

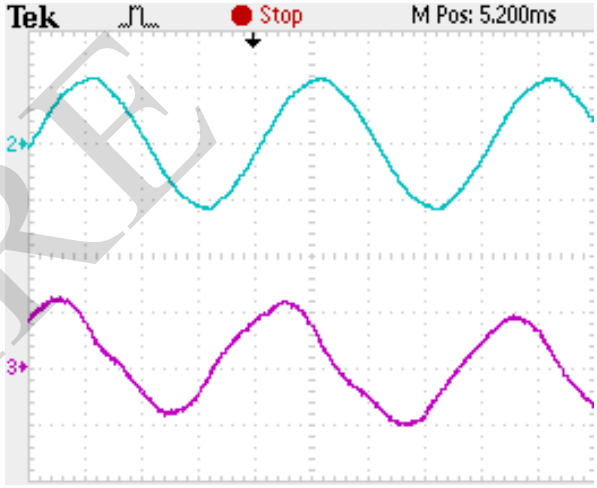

voltage axis : 50 V/div, current axis : 5 A/div and time axis : 2 ms/div

(c) Stator voltage and stator current

Fig. 5 Instantaneous Waveforms Of Wind Energy Conversion System

Fig. 5 shows the various quantities of DFIG based wind energy conversion system. The gate pulses generated from control circuit is shown in Fig. 5 (a). The rotor voltages and currents corresponding to maintain the stator voltage constant have been given in Fig. 5 (b). Fig. 5 (c) shows the stator voltage and current with the load of 1 kW. It is to be noted from the figure that the voltage and frequency is maintained constant at load terminals.

The steady state performance characteristics for the proposed method of DFIG operating for standalone application is tested on a three phase, 3.7 kW, 415V, 50 Hz, 4 pole, delta connected slip ring induction machine. The calculated and experimental results for sub synchronous and super synchronous operation of the generator are briefly described in this section. In constant slip operation, the rotor speed of the

IJARE

machine is maintained constantly at sub synchronous speed of 1400 rpm and super synchronous speed of 1600 rpm respectively. The graphs are plotted against stator output power of the generator. Fig. 6 shows the various performance quantities such as rotor voltage, power factor, stator current, rotor current, rotor active power and reactive power. It is to be noted from Fig. 6(a) that rotor voltage is reduced with increasing stator power. The power factor is high for sub synchronous mode of operation compared with super synchronous mode of operation. Further, the variation of stator and rotor current are presented in Fig. 6 (b).

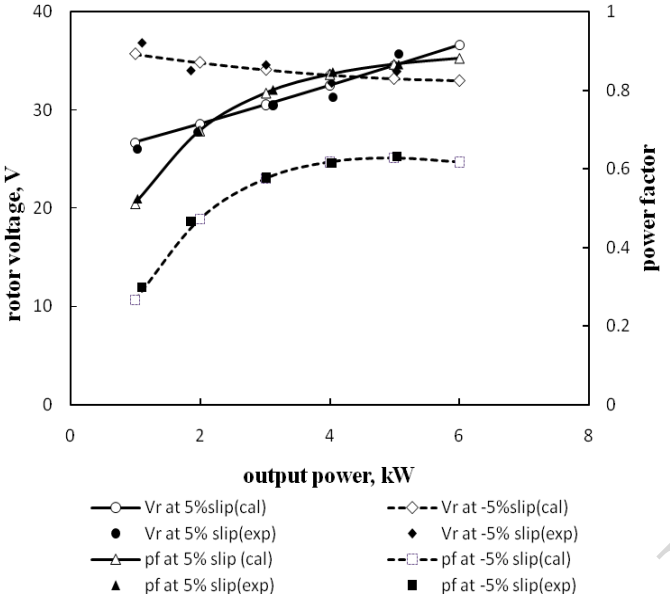

(a) Rotor voltage and stator power factor against stator output power at 1400 rpm and 1600 rpm

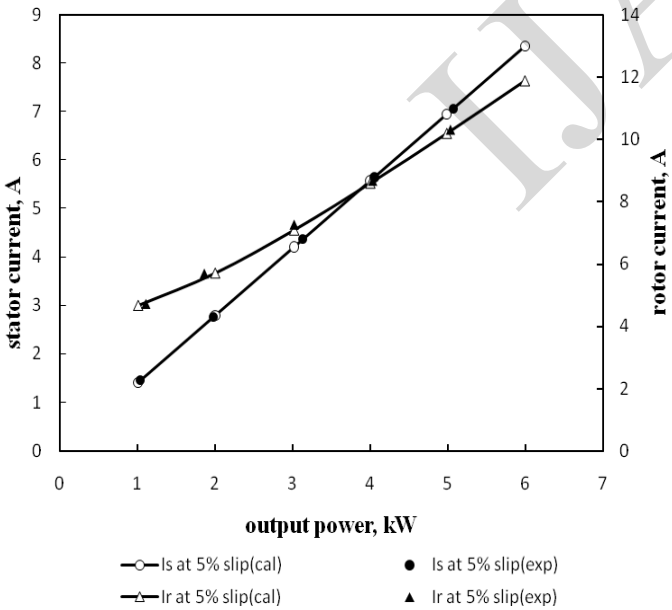

(b) Stator current and rotor current against stator output power at 1400 rpm and 1600 rpm

Fig. 6(c) shows the rotor active and reactive power characteristics. The active power is supplied to the rotor terminals from the inverter in the case of sub synchronous operation. But in the case of super synchronous operation, the active power is supplied to the inverter from rotor terminals (minus sign indicates reverse power flow). Reactive power supplied from rotor terminal is high in sub synchronous operation compared with super synchronous mode of operation. In lower load condition of super synchronous mode, both real and reactive powers are supplied from rotor terminals to inverter.

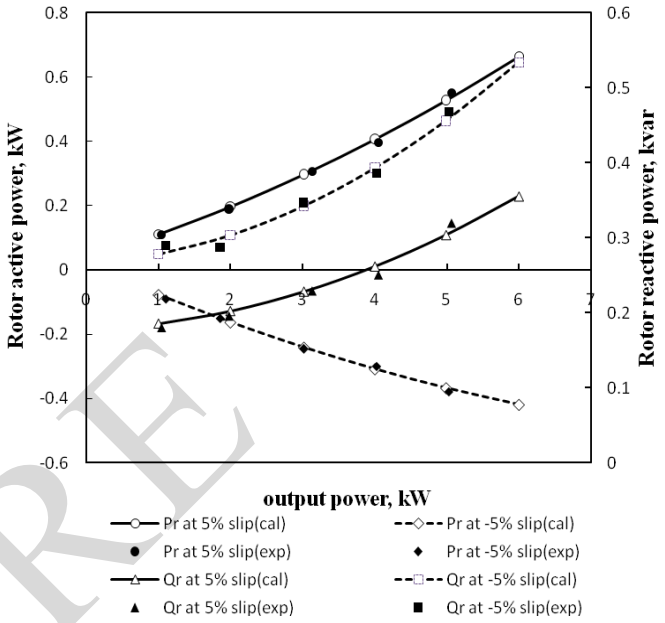

(c) Rotor active and reactive power against stator output power at 1400 rpm and 1600 rpm

V. CONCLUSIONS

A simple controller suitable for DFIG based wind energy conversion system employing 555 timer ICs and flip-flops has been constructed. A desired ac voltage of fixed frequency at load terminal has been achieved by appropriately adjusting the frequency of control and varying the DC input voltage of inverter. Experiments have been conducted on a 4-pole, three-phase, 415V, 5 KVA DFIG driven by a separately excited DC motor. The experimental results are closely agree with calculated values for constant speed operation. Thus, it is believed that the proposals presented in the paper will be useful for the manufacturer in achieving simple control of DFIGs. As a further work, the proposed simple controller can be implemented in closed loop and also analyze the harmonics at stator terminals of the generator.

ACKNOWLEDGMENT

The authors wish to thank the authorities of the Malaviya National Institute of Technology, Jaipur and National Institute of Technology, Tiruchirappalli, India for the facilities provided for carrying out the experimental and simulation work.

IJARE

REFERENCES

[1] A. Izadian, N. Girrens and P. Khayyer, "Renewable Energy Policies: A Brief Review of the Latest U.S. and E.U. Policies", IEEE *Industrial Electronics Magazine,* vol.7, no.3, pp.21-34, 2013

[2] J. Tastu, P. Pinson, P.J. Trombe, Pand H. Madsen, "Probabilistic Forecasts of Wind Power Generation Accounting for Geographically Dispersed Information", IEEE Transactions on Smart Grid, vol.5, no.1, pp.480-489, 2014.

[3] N. Kumaresan, "Analysis and control of three-phase self-excited induction generators supplying single-phase ac and dc loads" IEE Proc. Electric Power Applications, Vol. 152, No. 3, PP.739-747, 2005.

[4] N. Kumaresan, M.P. Selvan and M. Subbiah "Design optimisation and speed extension of wind-driven self-excited induction generators – A new approach", Electric Power Components and Systems, Vol.32, No.2, pp.215-228, 2004.

[5] N. Kumaresanand M. Subbiah, "Innovative reactive power saving in wind-driven grid-connected induction generators using a delta-star stator winding: part I, Performance analysis of the delta-star generator and test results", Wind Engineering, Vol.27, No.2, pp.107 – 120, 2003.

[6] N. Kumaresanand M. Subbiah, "Innovative reactive power saving in wind-driven grid-connected induction generators using a delta-star stator winding: part II, Estimation of annual Wh and VARh of the delta-star generator and comparison with alternative schemes", Wind Engineering, Vol.27, No.3, pp.195-204, 2003.

[7] S. Senthil Kumar, N. Kumaresan, N. Rakesh, K. Vijayakumar and M. Subbiah, "Wind-driven SEIGs for supplying isolated loads employing DSP based power electronic controllers", International journal of Wind Engineering, Vol.36 , No.6, pp.739-757, 2012.

[8] Xibo Yuan; Yongdong Li, "Control of variable pitch and variable speed direct-drive wind turbines in weak grid systems with active power balance", *Renewable Power Generation, IET* , vol.8, no.2, pp.119,131, 2014.

[9] K.Vijayakumar, A. Arjun, R.Karthigaivel and N. Kumaresan, "A Simple Feed Forward Controller for Stand-Alone Wind-Driven Permanent Magnet Synchronous Generator", Proceedings of the International Conference INDICON 2009, 18 – 20 December, India, 2009.

[10] M. Tazil, V. Kumar, R.C. Bansal, S. Kong, Z.Y. Dong, W. Freitas, and H.D. Mathur, "Three-phase doubly fed induction generators: an overview," *IET Electr. Power Appl.*, 4,(2), pp.75-89, 2010.

[11] K. Vijayakumar, N. Kumaresan and N. Ammasai Gounden, "Speed Sensor-Less Maximum Power Point Tracking and Constant Output Power Operation of Wind-Driven Wound Rotor Induction Generators", *IET Power Electron.,* 8, (1), pp.33-46, 2015.

[12] Zhe Chen, J.M. Guerrero, and F. Blaabjerg, "A Review of the State of the Art of Power Electronics for Wind Turbines", *IEEE Trans. Power Electron.,* vol.24, no.8, pp.1859-1875, 2009.

[13] A. K. Jain and V. T. Ranganathan, "Wound rotor induction generator with sensorless control and integrated active filter for feeding nonlinear loads in a stand-alone grid", *IEEE Trans. Ind. Electron.,* vol. 55, no. 1, pp. 218– 228, Jan. 2008.

[14] T. Bhattacharya, and L. Umanand, "Negative sequence compensation within fundamental positive sequence reference frame for a stiff micro-grid generation in a wind power system using slip ring induction machine", *IET Electr. Power Appl.,* vol.3, no.6, pp.520-530, Nov. 2009.

[15] R. Pena, R. Cardenas, J. Proboste, G. Asher, and J. Clare, "Sensorless control of doubly-fed induction generators using a rotor-current-based MRAS observer", *IEEE Trans. Ind. Electron.,* vol. 55, no. 1, pp. 330–339, Jan. 2008.

[16] K. Vijayakumar, N. Kumaresan and N. Ammasai Gounden, "Operation of Inverter Assisted Wind-driven Slip Ring Induction Generator for Stand-alone Power Supplies", *IET Electr. Power Appl.,* 7, (4), pp.256-269, 2013.

[17] K. Vijayakumar, N. Kumaresan, N. Ammasai Gounden, and S.B. Tennakoon, "Real and reactive power control of hybrid excited wind-driven grid-connected doubly fed induction generators", *IET Power Electron.,* 6, (6), pp.1197-1208, 2013.

[18] K. Vijayakumar, N. Kumaresan, and N. Ammasai Gounden, "Operation and closed-loop control of wind-driven stand-alone doubly fed induction generators using a single inverter-battery system", *IET Electr. Power Appl.,* 6,(3), pp.162-171, 2012.

IJARE